GENERAL NOTES

THE DIE SHOWN HEREON IS A TYPICAL 1.25" TUBE DIE AS MANUFACTURED BY JD SQUARED.

MAKE SURE YOU ORDER A 'TUBING' DIE AND NOT A PIPE DIE.

BE SURE THAT THE CAMPING U-STRAP COMES WITH THE DIE SET AS WELL AS THE FOLLOW BAR

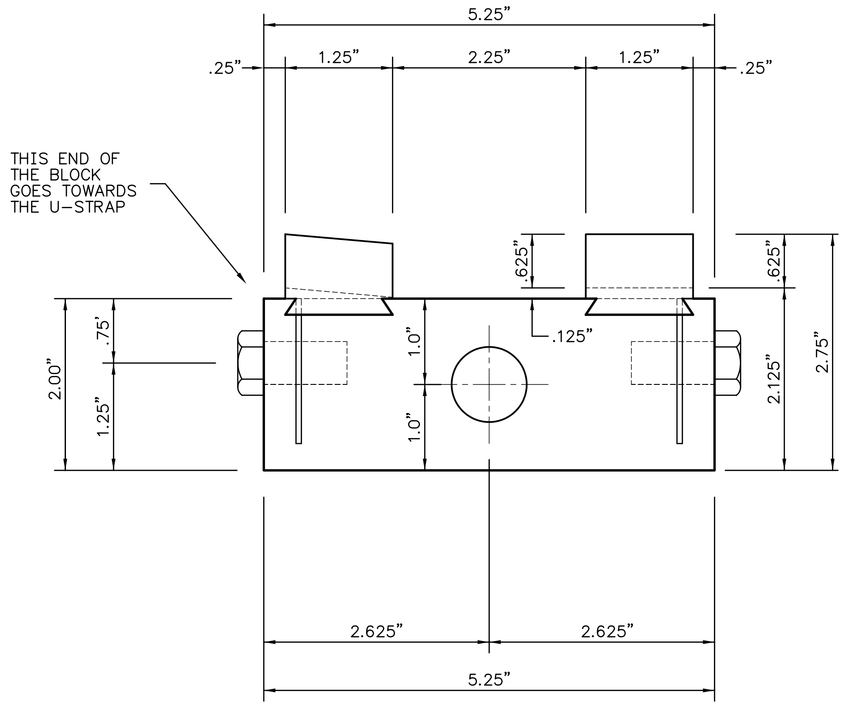

FOLLOW BAR
TOP VIEW

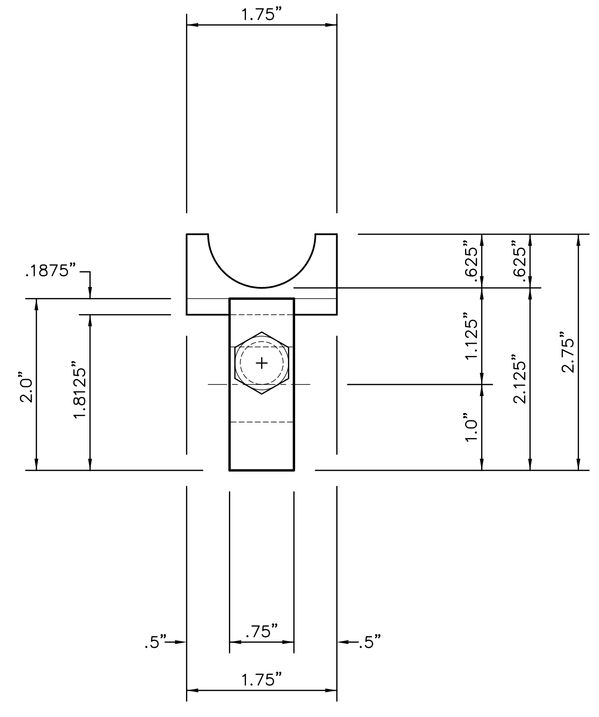

FOLLOW BAR
END VIEW

JD² TYPE FOLLOW BAR
SCALE 1" = 1"

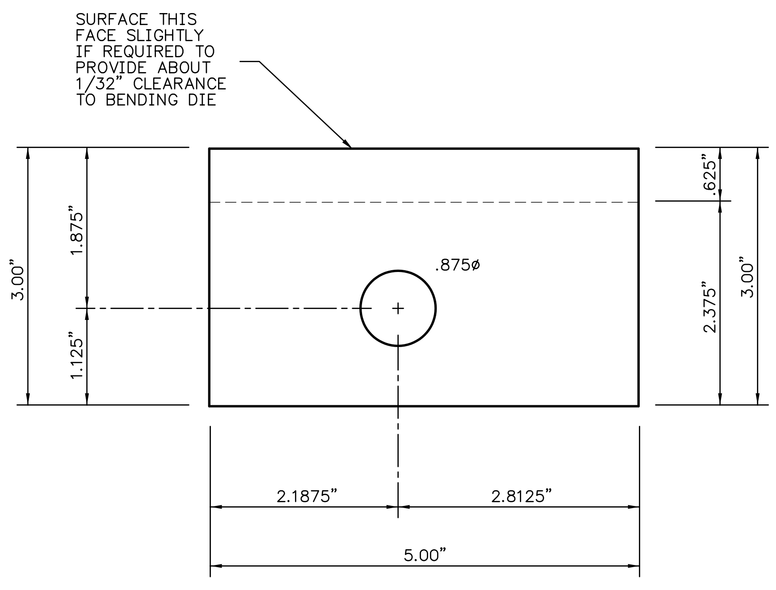

FOLLOW BAR
TOP VIEW

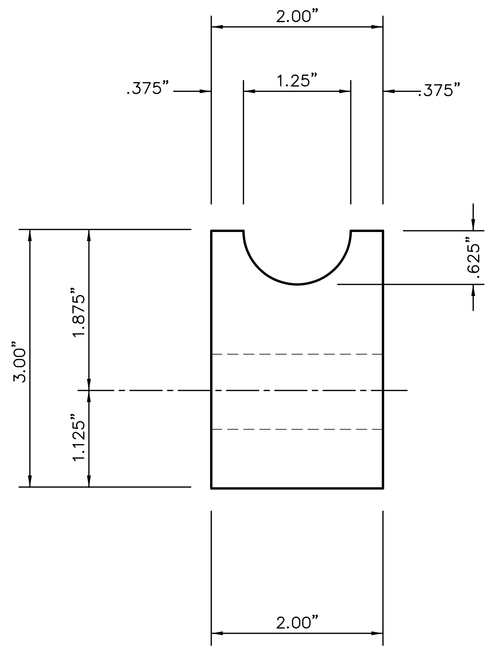

FOLLOW BAR
END VIEW

ALTERNATE ONE-PIECE FOLLOW BAR
SCALE 1" = 1"
THIS UNIT PROVIDED BY INDEPENDENT MANUFACTURER

0 1

GARY W. WEISHAUPT

PERFORMANCE ENGINEERING
CHASSIS FABRICATION
FLOWBENCH TESTING
MACHINE WORK
RESTORATIONS

1490 RIVER PARK BLVD.
NAPA, CALIFORNIA 94559
Ph. 707-252-3427
Fax 707-252-3427
email: gww25@pacbell.net

Revision	Date
• INITIAL LAYOUT	12-7-04
• GENERAL REVISION	7-20-06
•	
•	
•	
•	
•	
•	

Project Title
CHOPPER BUILDERS HANDBOOK

BUDGET TUBING BENDER

Drawn By	GWW
Date	7-20-06
Checked By	HC
Date	7-24-06
Scale	1" = 1"
File No.	–
Project No.	–

Sheet Description
TYPICAL FOLLOW BAR

Sheet No.
CBTB-6.1