CHOPPER BUILDERS HANDBOOK

© 2001, 02, 03, 04, 05, 06, 07 G.W. WEISHAUPT, ALL RIGHTS RESERVED.

GENERAL NOTES

1. NOTE THAT THE 'ANGLE' LINES ON THE PROTRACTOR FOR THE FIXTURE HOLDING BEAM ARE NOT RADIAL TO A SINGLE RADIUS POINT BUT FORMED ALONG A SPIRAL ARC. WE HAVE INCLUDED A .DXF FILE IF YOU WANT TO HAVE THE LINES AND NUMBERS LASER ETCHED OTHERWISE USE A FULL SIZE COPY OF THE DESIGN EXACTLY AS WE'VE DRAWN IT.

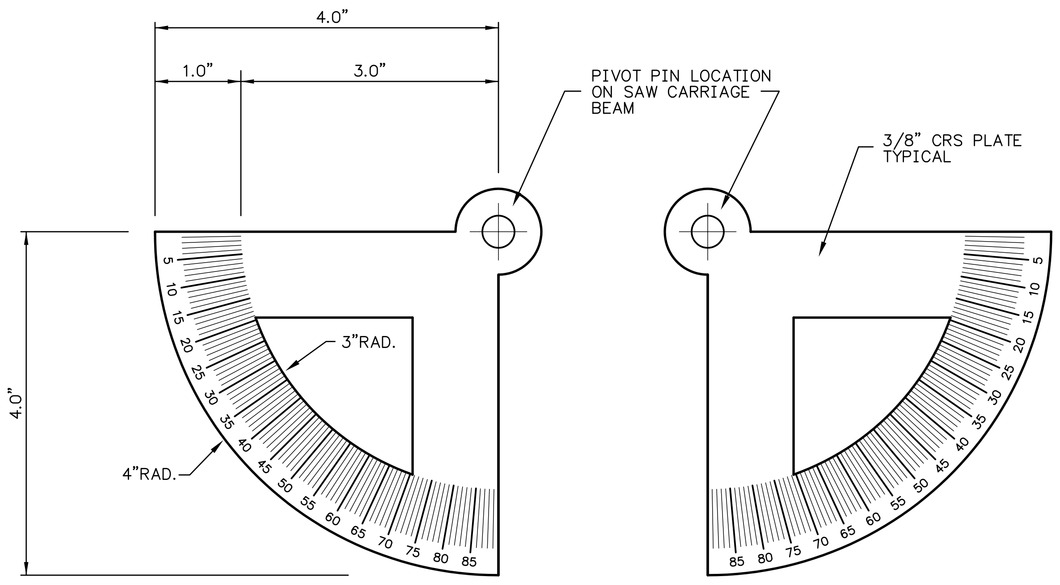

RIGHT SIDE
1" = 1"

LEFT SIDE
1" = 1"

SAW CARRIAGE PROTRACTOR

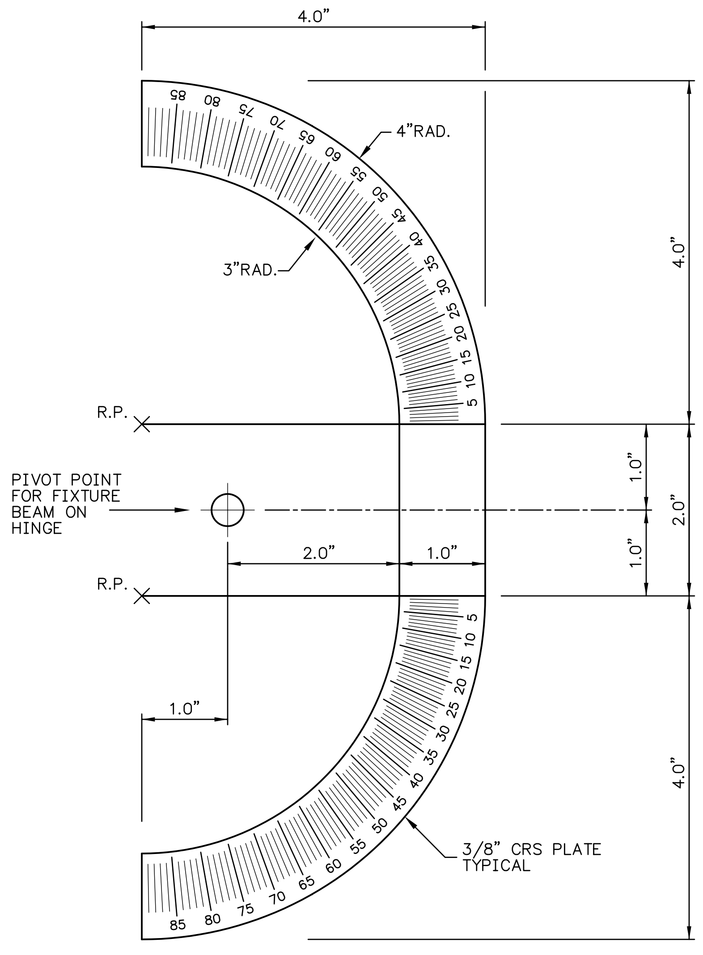

TOP VIEW
1" = 1"

FIXTURE BEAM PROTRACTOR

GARY W. WEISHAUPT

PERFORMANCE ENGINEERING
CHASSIS FABRICATION
FLOWBENCH TESTING
MACHINE WORK
RESTORATIONS

1490 RIVER PARK BLVD.
NAPA, CALIFORNIA 94559
Ph. 707-252-3427
Fax 707-252-3427
email: gww25@pacbell.net

Revision	Date
• INITIAL LAYOUT	12-7-04
• GENERAL REVISION	7-20-06
• GENERAL REVISION	1-4-07
•	
•	
•	
•	
•	

Project Title
CHOPPER BUILDERS HANDBOOK

BUDGET TUBING NOTCHER

Drawn By	GWW
Date	1-4-07
Checked By	HC
Date	1-6-07
Scale	1" = 1"
File No.	–
Project No.	–

Sheet Description
OPTIONAL PROTRACTORS

0 1

Sheet No.
CBTN 5.1